BARR FLOOR

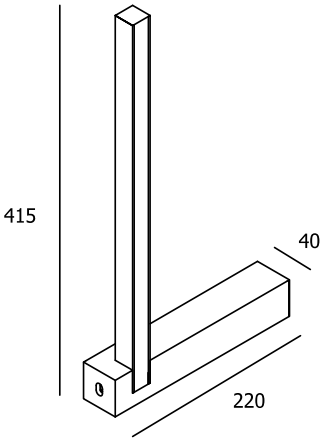

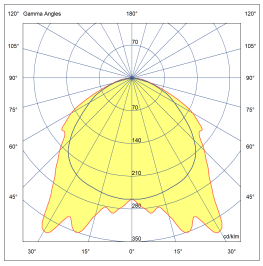

MAX. POWER	5,8 Watt	**BEAM ANGLE**	120°
CRI	90+	**VOLTAGE**	230 VAC
GEAR / DRIVER	Included	**MATERIAL**	Aluminium / Potting material
WEIGHT (KG)	0,8	**IP**	67

SPECIAL: Other lenghts for led barr on request

MODELS

	ARTICLE N°	DESCRIPTION	COLOUR	KELVIN	LUMEN
	004382122702	BARR FLOOR EXT. WARM WHITE	BLACK STRUC.	2700	350
	004382123002	BARR FLOOR EXT. WARM WHITE	BLACK STRUC.	3000	350
	004382124002	BARR FLOOR EXT. NATURAL WHITE	BLACK STRUC.	4000	350
	004382126002	BARR FLOOR EXT. COLD WHITE	BLACK STRUC.	6000	350
	004382122701	BARR FLOOR EXT. WARM WHITE	WHITE STRUC.	2700	350
	004382123001	BARR FLOOR EXT. WARM WHITE	WHITE STRUC.	3000	350
	004382124001	BARR FLOOR EXT. NATURAL WHITE	WHITE STRUC.	4000	350
	004382126001	BARR FLOOR EXT. COLD WHITE	WHITE STRUC.	6000	350
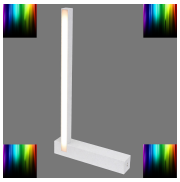	**004382122703**	BARR FLOOR EXT. WARM WHITE	ANY RAL	2700	350
	004382123003	BARR FLOOR EXT. WARM WHITE	ANY RAL	3000	350
	004382124003	BARR FLOOR EXT. NATURAL WHITE	ANY RAL	4000	350
	004382126003	BARR FLOOR EXT. COLD WHITE	ANY RAL	6000	350