BULK SKAB LED PROFILE + OMEGA DIFFUSER 20X3M

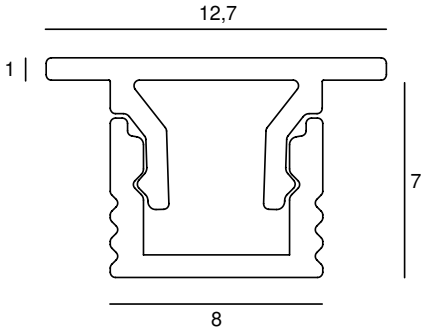

MATERIAL	ALUMINIUM

MODELS

	ARTICLE N°	DESCRIPTION	COLOUR	SIZE
	861130000016	Bulk skab led profile + Omega diffuser 20X3m	ANODIZED	20 X 3 METERS