# HOLY LIGHT SQUARE TRIMLESS

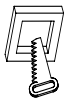

202 x 202 MM

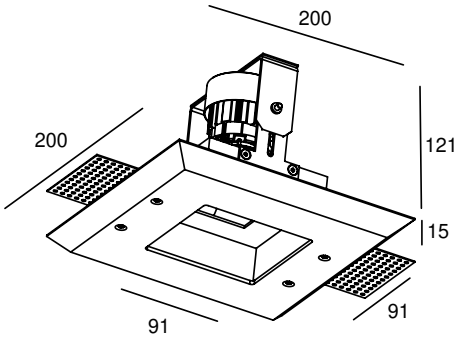


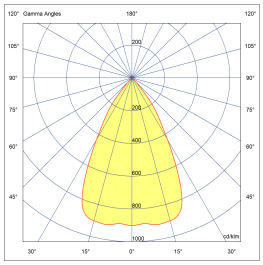

| | | | |
|---|---|---|---|
| **POWERLED(S)** | 1 x 6 Watt incl. | **REFLECTOR** | 60° incl. |
| **CRI** | 90+ | **VOLTAGE** | 500 mA |
| **GEAR / DRIVER** | Not included | **FORWARD VOLTAGE** | 13,5 VDC |
| **MATERIAL** | Fermacel + Aluminium | **MOUNTING DEPTH** | 121 mm |
| **WEIGHT (KG)** | 0,5 | **CUTOUT SHAPE / SIZE** | 202 x 202 mm |
| **IP** | 20 | | |

## MODELS

| | ARTICLE N° | DESCRIPTION | COLOUR | KELVIN | LUMEN |
|---|---|---|---|---|---|
| | **008091612701** | HOLY LIGHT SQUARE TRIMLESS INT. WARM WHITE | WHITE STRUC. | 2700 | 900 |
| | **008091613001** | HOLY LIGHT SQUARE TRIMLESS INT. WARM WHITE | WHITE STRUC. | 3000 | 900 |
| | **008091612703** | HOLY LIGHT SQUARE TRIMLESS INT. WARM WHITE | ANY RAL | 2700 | 900 |
| | **008091613003** | HOLY LIGHT SQUARE TRIMLESS INT. WARM WHITE | ANY RAL | 3000 | 900 |